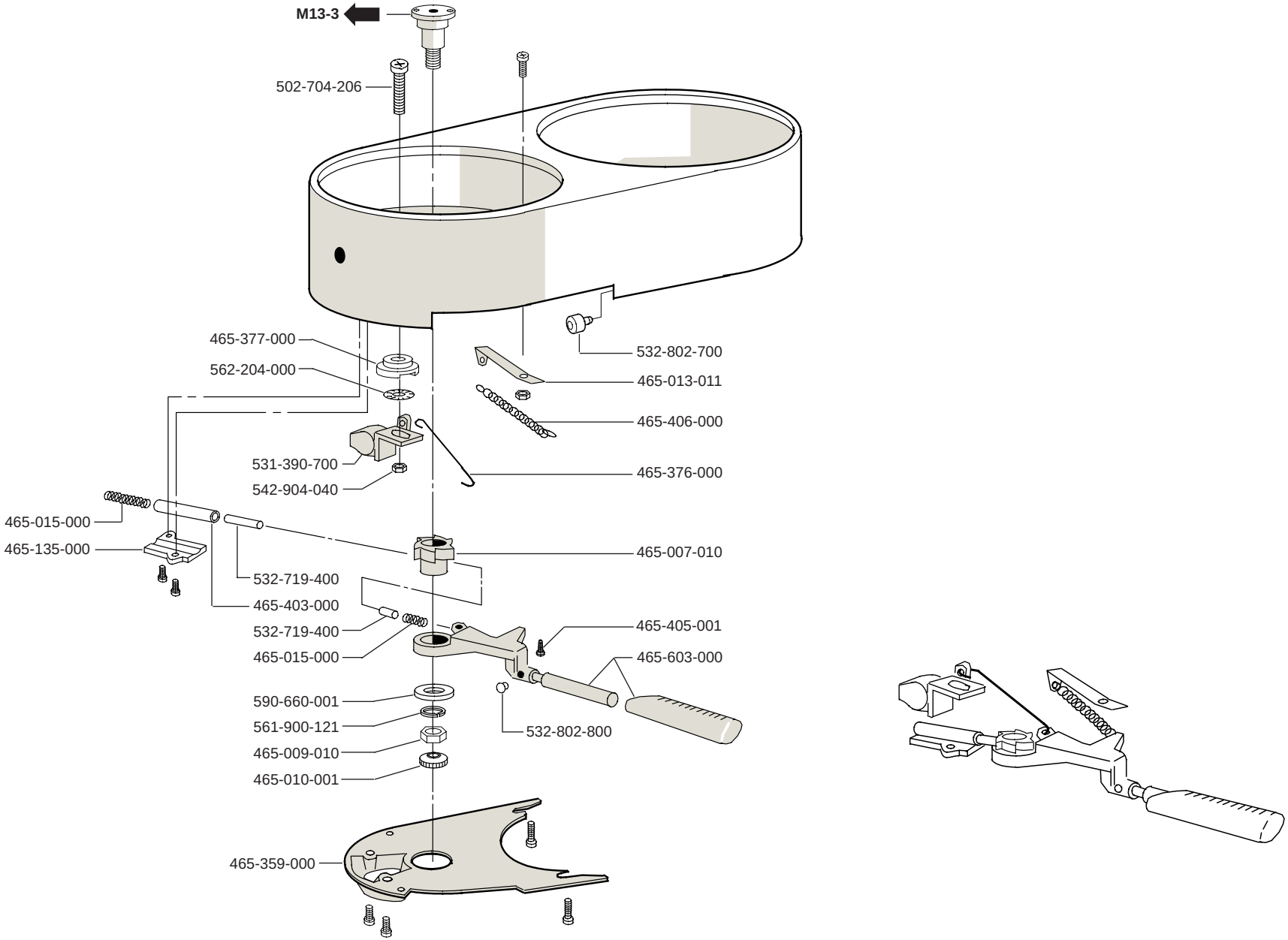
M13-3
502-704-206
465-377-000
562-204-000
532-802-700
465-013-011
465-406-000
531-390-700
542-904-040
465-376-000
465-015-000
465-135-000
465-007-010
532-719-400
465-403-000
532-719-400
465-015-000
465-405-001
465-603-000
590-660-001
561-900-121
465-009-010
465-010-001
532-802-800
465-359-000